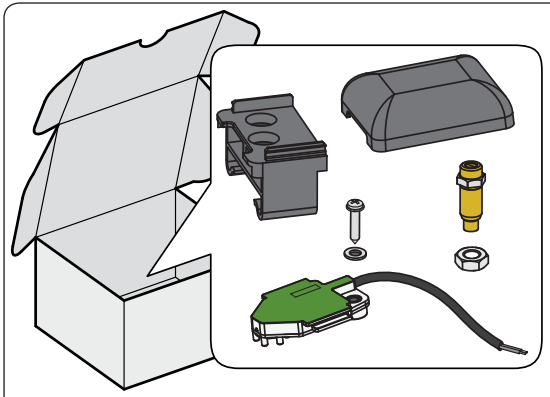

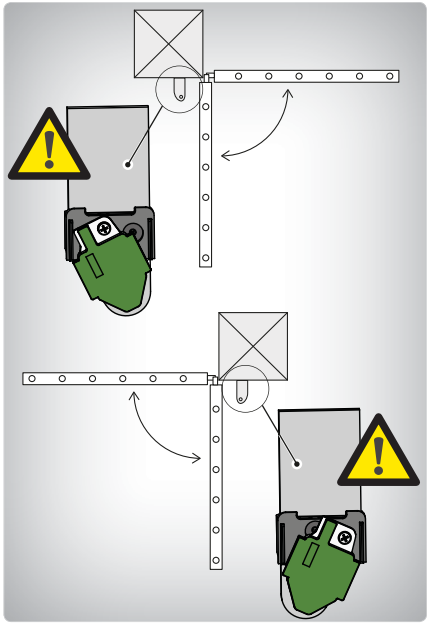

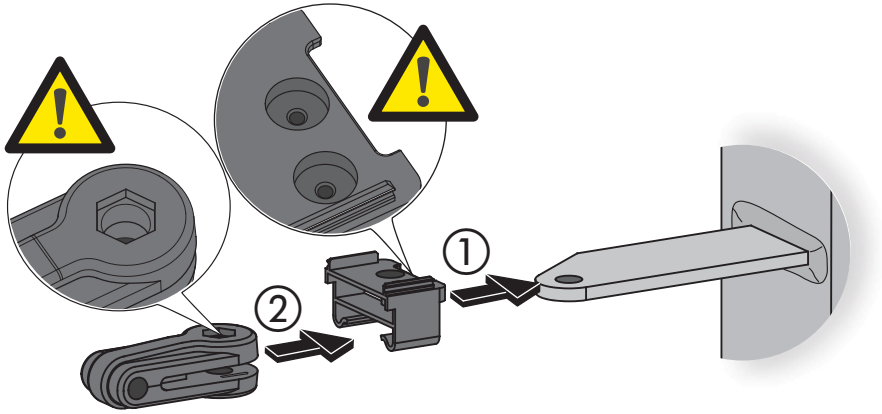
1
2

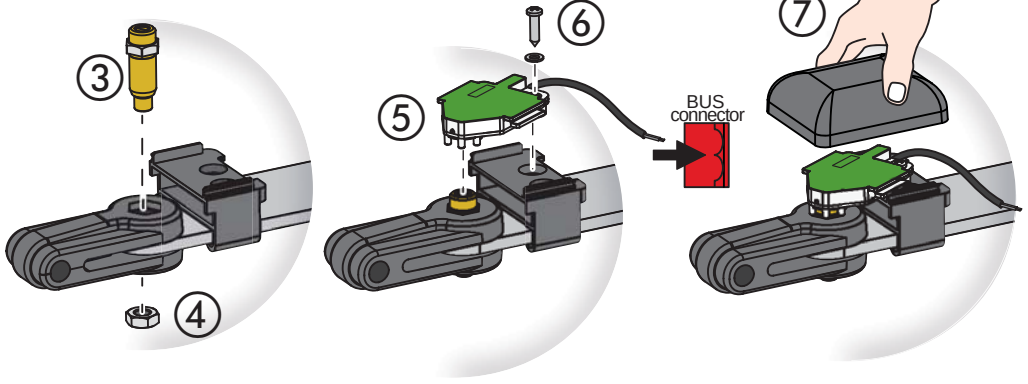
3
4
5
6
7
BUS
connector