XGUARD-BA

XGUARD BRACKET ACCESSORY
FOR CEILING OR POLE MOUNTING

DESCRIPTION

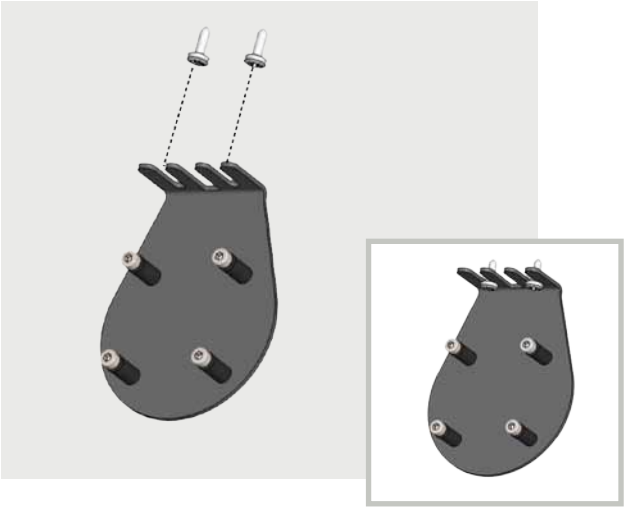

USE



INSTALLATION

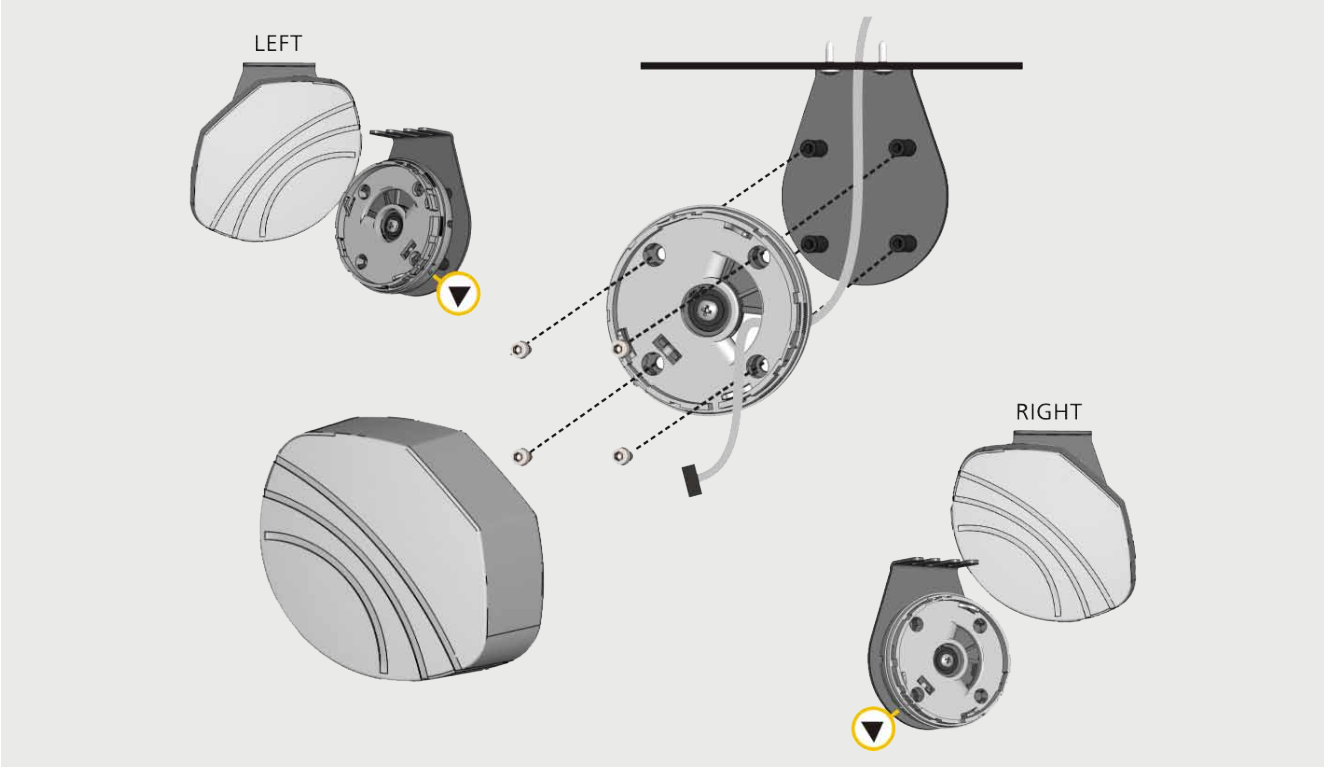

©BEA | User's Guide | 42.8064 / V1 - 07.13

FAAC S.p.A . - Via Calari, 10 40069 Zola Predosa - Italia - tel. +39 051 61724 - fax. +39 051 758518 - www.faacgroup.com

Manufactured by: BEA SA - LIEGE Science Park - Allée des Noisetiers 5 - 4031 Angleur - Belgium - T +32 4 3616565 - F +32 4 3612858 - info@bea.be - www.bea.be