# T20 - T21





carta riciclata 100% recycled paper 100% papier recyclé 100% 100% Altpapier 100% papel reciclado

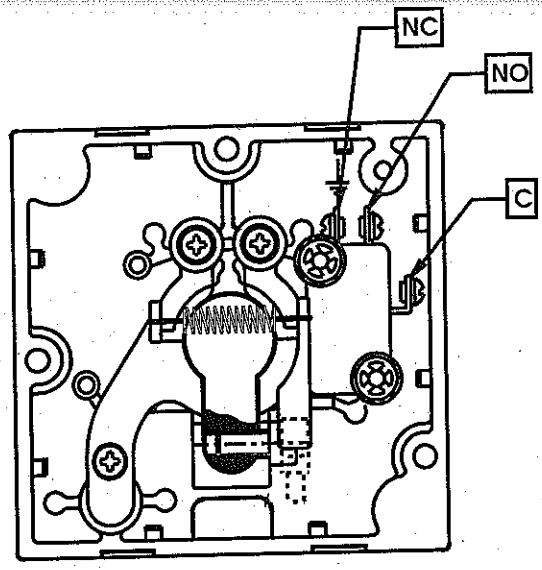


Fig. 8

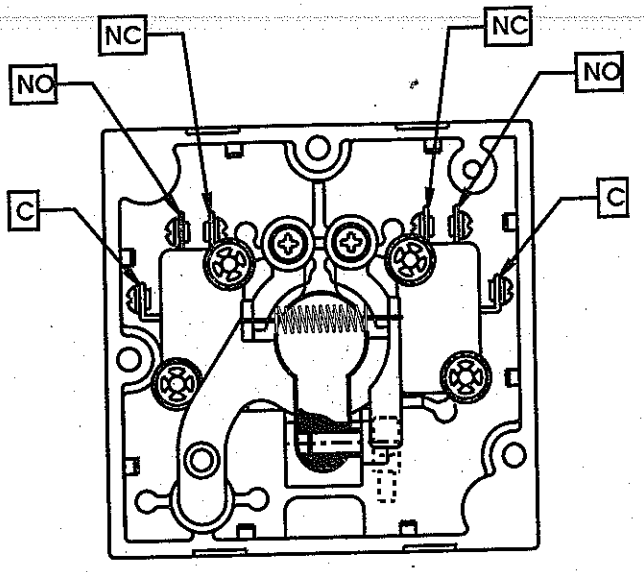


Fig. 9

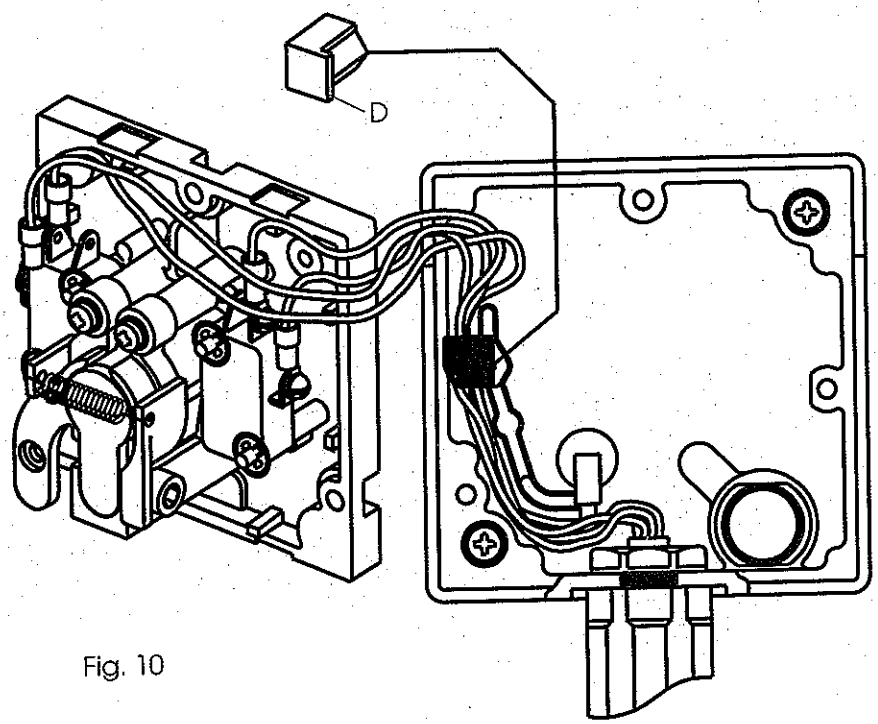


Fig. 10

SERIE T20

| CONT. MICRO | 401 MPS | 402 MPS | 440 MPS | 444 MPS | 590 MP | 624 MPS | 746 SD1 | 746 MPS | 844 MP | 826 MPS |
|---|---|---|---|---|---|---|---|---|---|---|
| N.O. | 2 | 1 | 1 | 1 | A/O | 1 | 6 | 2 | 2 | 2 |
| COM. | 1 | 3 | 7 | 7 | B/W | 5 | 3 | 1 | 1 | 1 |

SERIE T21

| CONT. MICRO | 200 BT | 200 MPS | 401 MPS | 402 MPS | 440 MPS | 444 MPS | 624 MPS | 746 MPS | 844 MP | 826 MPS |
|---|---|---|---|---|---|---|---|---|---|---|
| N.O. | OPEN | 1 | 2 | 1 | 1 | 1 | 1 | 2 | 2 | 2 |
| COM. | COM. | 4 | 1 | 3 | 7 | 7 | 5 | 1 | 1 | 1 |
| N.C. | | | | | | | | | | |
| N.O. | CLOSE | | | | | | | | | |
| COM. | COM. | 4 | 1 | 3 | 7 | 7 | 5 | 1 | 1 | 1 |
| N.C. | | 3 | 4 | 4 | 4 | 4 | 3 | 3 | 4 | 4 |

Fig. 11

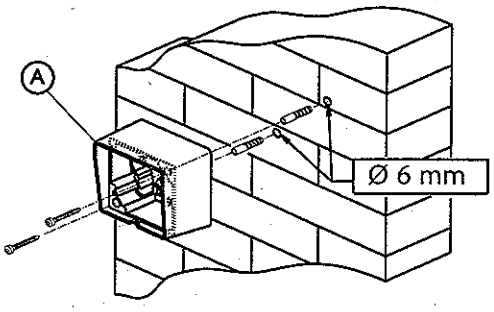


Fig. 1

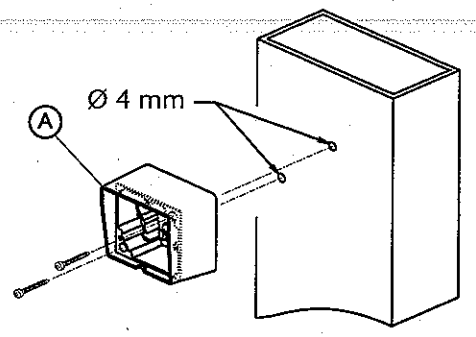


Fig. 2

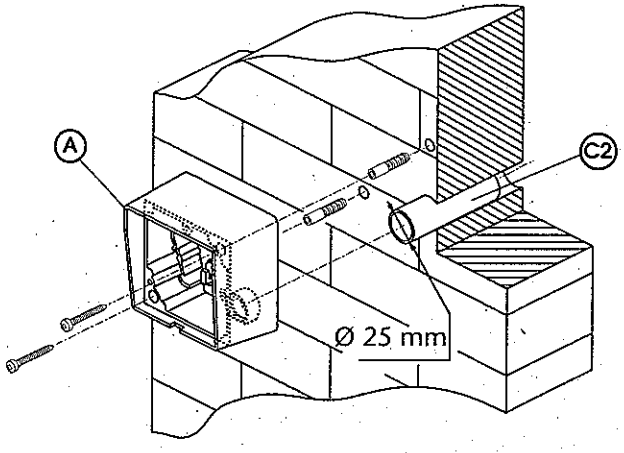


Fig. 3

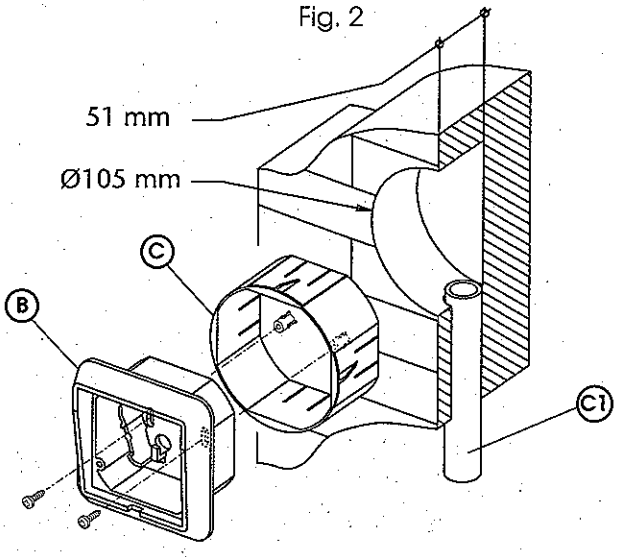


Fig. 4

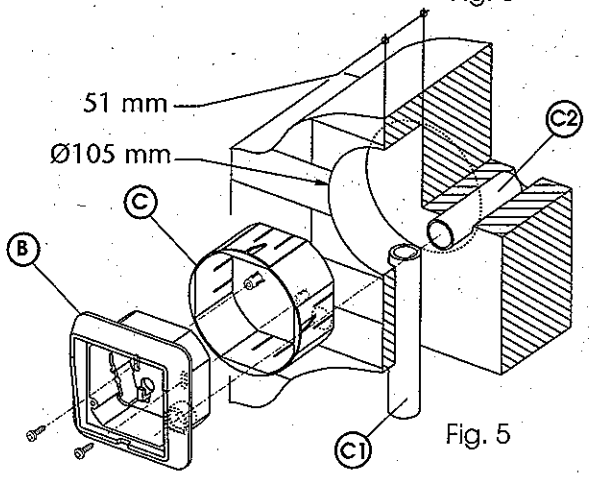


Fig. 5

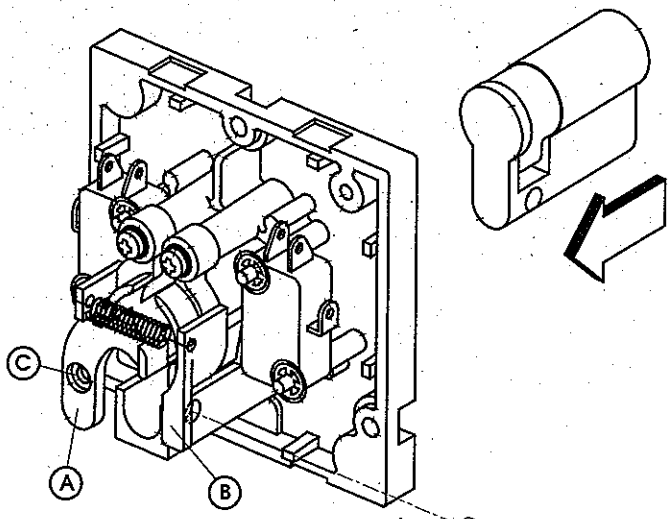


Fig. 6

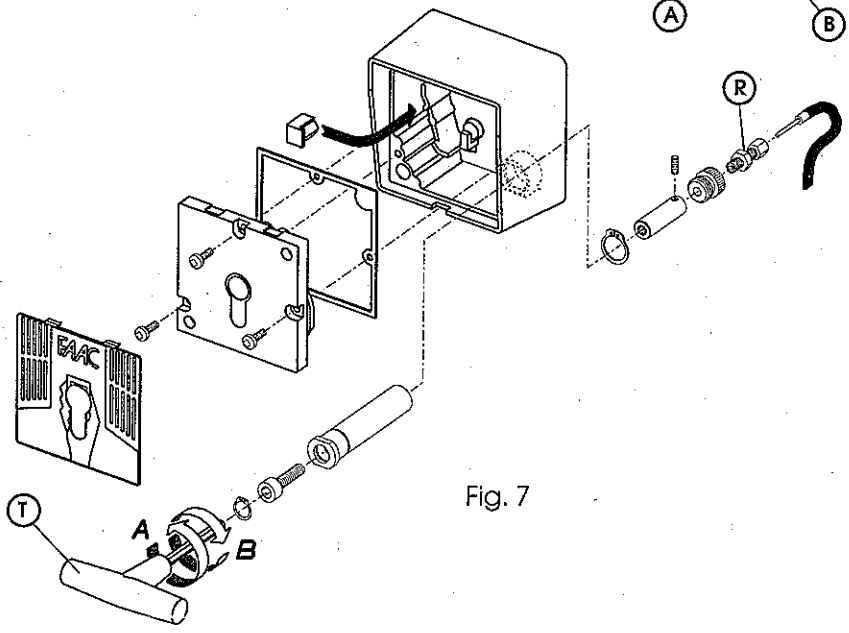


Fig. 7

ENGLISH

## IMPORTANT

**READ THE INSTRUCTIONS CAREFULLY** before fitting the keyswitches. Keep the instructions for future reference. Installation and electrical connections must be carried out in accordance with current applicable standards. Keep low voltage wires separate from high voltage wires.
**FAAC SpA** accepts no responsibility for any damage resulting from the incorrect or improper use of the keyswitch.

## TECHNICAL CHARACTERISTICS

| MODELS | N° of MICROSWITCHES | CONTACT TYPE | PROTECTION CLASS | LOCK |
|---|---|---|---|---|
| T 20 E / T20 I | 1 | N.O. / N.C. | IP 55 | CYLINDER 41.5 mm |
| T 21 E T21 EF<br>T21 I / T21 IF | 2<br>INDEPENDENT | N.O. / N. C.<br>N.O. / N. C | IP 55 | CYLINDER 41.5 mm |

## INSTALLATION

Keyswitches **T20 E** and **T21 E** can be surface mounted on walls or on metal columns.
Keyswitches **T20 I** and **T21 I** can be flush mounted using the box code 720316.
Keyswitches **T21 EF** and **T21 IF** are fitted with emergency release for use with the series 226 roller door operators.

**T20 E / T21 E**
WALL MOUNTING **fig. 1**
Position the keyswitch housing **A** on the wall and mark the two fixing points. Drill the fixing holes using a 6 mm masonry bit. Insert anchor plugs and fix the housing **A** to the wall using the screws supplied.
MOUNTING ON METAL COLUMN **fig. 2**
Position the keyswitch housing **A** on the column and mark the two fixing points. Drill the fixing holes using a 4 mm bit for metal and fix housing **A** using two 4.8 x 16 self-tapping screws.

**T21 EF (for use with roller door gearmotors only)**
WALL MOUNTING **fig. 3**
Position the keyswitch housing **A** and mark the position of the emergency release. Drill through the wall using a 25 mm masonry bit. We recommend that you insert a plastic cable sheath (**C2**) in this hole. Mark the two fixing points of the housing. Drill the fixing holes using a 6 mm masonry bit and insert anchor plugs. Assemble the emergency release as shown in **fig. 7**. Fix the housing **A** using the screws supplied.

**T20 I / T21 I**
WALL MOUNTING **fig. 4**
Using a masonry cutter, cut a recess for the box. Drill a hole for cable sheath **C1** and fit box **C** in the recess. Fix housing **B** inside box **C** using the screws supplied.

**T21 IF (for roller door gearmotors only)**
WALL MOUNTING **fig. 5**
Using a masonry cutter, cut a recess for the box. Drill a hole for the cable sheath **C1** and fit box **C** in the recess. Find the centre of the emergency release and drill a hole through the wall at this point using a 25 mm masonry bit. We recommend that you insert a plastic cable sheath (**C2**) in this hole.
Assemble the emergency release as shown in **fig. 7**. Fix housing **B** inside box **C** using the screws supplied.

**NOTES ON THE EMERGENCY RELEASE (fig. 7 - for models T21 EF/T21 IF only)**
Part **R fig. 7** is supplied in the packaging of the solenoid brake of the roller door gearmotors.
***TO RELEASE THE SYSTEM***: insert the **key T** in the lock and turn in the direction of **arrow B**.
***TO RE-LOCK THE SYSTEM***: insert the **key T** in the lock and turn in the direction of **arrow A**.
**N.B.**: The keyswitch is burglar-proof. It is not possible to access the microswitches and to operate the emergency release without first turning the key in the lock.

## ELECTRICAL CONNECTIONS

The keyswitches in the **T20** range may be used as **OPEN** impulse devices (**N.O.** contact) or alternatively as **STOP** impulse devices (**N.C.** contact). These keyswitches can only be used to control one function as they are fitted with a single microswitch (**fig. 8**).
The keyswitches in the **T21** range may be used as **OPEN** impulse devices (**N.O.** contact) and **STOP** impulse devices (**N.C.** contact), or as **OPEN** impulse devices (**N.O.** contact) and **CLOSE** impulse devices (**N.O.** contact) with the 200 BT and 200 MPS electronic control units. These keyswitches can be used to control two functions as they are provided with two microswitches (**fig. 9**).
The tables in **Fig. 11** show the connections on the terminal blocks of **FAAC** control units.
Make the electrical connections and route the wires through the guide in the housing **Fig. 10**. Secure the wires with the cable clamp **D fig. 10**. Insert the lock on the support by pulling levers **A** and **B** apart as shown in **fig. 6**. On **T20** models insert the screw **C** supplied. Assemble the keyswitch body following the indications in **fig. 7**.
**CAUTION**: T20 AND T21 KEYSWITCHES ARE TO BE USED FOR LOW VOLTAGE IMPULSES ONLY.